GENERAL INFORMATION
This product has been manufactured by or on behalf of Gembird Europe B.V.. Inquiries to the EU Importer or related to product compliance in Europe should be sent to: Gembird Europe B.V., Wittevrouwen 56, 1358 CD, Almere, The Netherlands. www.gmb.nl
Warranty conditions: www.gmb.nl/warranty
Product support: www.gmb.nl/service and/or helpdesk@gembird.nl

SAFETY
(ENG) To ensure safe handling of the product, follow the safety advice on: **(DE/AT)** Hinweise zum sicheren Gebrauch der Produkte finden Sie auf: **(NL/BE)** Voor een veilig gebruik van het product volgt u deze algemene veiligheidsaanwijzingen op: **(ES)** Para garantizar una manipulación segura de los dispositivos, siga las advertencias de seguridad disponibles en: **(CZ)** Abyste zajistili bezpečnou manipulaci s výrobkem, dodržujte bezpečnostní pokyny na: **(FR/BE)** Pour garantir une manipulation sûre des appareils, suivez les consignes de sécurité sur: **(IT)** Per garantire una manipolazione sicura del prodotto, seguire i consigli di sicurezza su: **(PT)** Para garantir o manuseio seguro do produto, siga as recomendações de segurança em: **(PL)** Aby obchodzić się bezpiecznie z produktami, należy przestrzegać wskazówek dotyczących bezpieczeństwa: **(RO)** Pentru asigurarea unei manipulări în condiții de siguranță a produsului, urmați recomandările de securitate de pe: **(SK)** Na zaistenie bezpečnej manipulácie so zariadeniami sa riaďte bezpečnostnými pokynmi na: **(SL)** Za zagotavljanje varnega ravnanja z napravami, upoštevajte varnostna navodila, ki jih najdete na: **(HR)** Da biste osigurali sigurno rukovanje uređajima, pratite sigurnosne savjete na web-mjestu: **(HU)** A készülékek biztonságos kezelésének érdekében kövesse a biztonsági tanácsokat **(BG)** За да осигурите безопасна работа на устройства, следвайте съветите за безопасност по-долу: **www.gmb.nl/safety**

(ENG) Waste disposal: The symbol of the crossed-out wheeled bin means that this appliance must not be disposed of with household waste at the end of its useful life. The appliance must be disposed of in specially set-up collection points, recycling yards or disposal companies. Owners of WEEE from private households can hand them in free of charge at the designated collection points of the public waste disposal authorities or at the take-back points set up by manufacturers or distributors in terms of the Directive 2012/19/EU. Please delete all personal data before returning the appliance. Before returning, please remove batteries or re-chargeable batteries that are not enclosed by the old device, as well as lamps that can be removed without destruction, and dispose them to a separate collection. **(DE/AT)** Entsorgungshinweise: Das Symbol der durchgestrichenen Mülltonne bedeutet, dass dieses Gerät am End eder Nutzungszeit nicht über den Haushaltsmüll entsorgt werden darf. Das Gerät ist bei eingerichteten Sammelstellen, Wertstoffhöfen oder Entsorgungsbetrieben abzugeben. (Gilt nur für Deutschland: Händler von Elektrogeräten mit einer Verkaufsfläche von mind. 400 m^2 für Elektrogeräte und ebensmittelhändler mit einer Fläche von 800 m^2, die mehrfach im Jahr Elektrogeräte anbieten sind verpflichtet Elektrogeräte zurückzunehmen. Rückgabe und Entsorgung sind für Sie kostenfrei. Beim Kauf eines Neugerätes haben Sie das Recht, ein entsprechendes Altgerät unentgeltlich zurückzugeben.) Bitte löschen Sie vor der Rückgabe alle personenbezogenen Daten. Bitte entnehmen Sie vor der Rückgabe Batterien oder Akkumulatoren, die nicht vom Altgerät umschlossen sind, sowie Lampen, die zerstörungsfrei entnommen werden können und führen diese einer separaten Sammlung zu. **(NL)** Afvalverwijdering: Het symbool van de doorgekruiste afvalbak betekent dat dit apparaat aan het einde van zijn levensduur niet bij het huisvuil mag worden gegooid. Het apparaat moet worden afgevoerd naar speciaal daarvoor ingerichte inzamelpunten, recyclingbedrijven of afvalverwerkingsbedrijven. Eigenaars van WEEE uit particuliere huishoudens kunnen de afgedankte apparatuur gratis inleveren bij de aangewezen inzamelpunten van de openbare afvalverwerkende autoriteiten of bij inzamelpunten van fabrikanten of distributeurs in de zin van richtlijn 2012/19/EU. Wis alle persoonlijke gegevens voordat u het apparaat retourneert. Verwijder voor het retourneren batterijen of oplaadbare batterijen die niet bij het oude apparaat zijn ingesloten, evenals lampen die zonder vernietiging kunnen worden verwijderd, en lever deze in bij een gescheiden inzamelpunt. **(FR/BE)** Traitement des déchets: Le symbole de la poubelle barrée d'une croix signifie que cet appareil ne doit pas être jeté avec les ordures ménagères en fin de vie. L'appareil doit être déposé dans des points de collecte spécialement aménagés, des parcs de recyclage ou des entreprises d'élimination. Les possesseurs de DEEE provenant de ménages privés peuvent les déposer gratuitement aux points de collecte désignés des autorités publiques d'élimination des déchets ou aux points de reprise mis en place par les fabricants ou les distributeurs conformément à la directive 2012/19/UE. Veuillez supprimer toutes les données personnelles avant de retourner l'appareil. Avant de retourner, veuillez retirer les piles ou les piles rechargeables qui ne sont pas enfermées dans l'ancien appareil, ainsi que les lampes qui peuvent être retirées sans destruction, et les jeter dans une collecte séparée. **(PL)** Utylizacja odpadów: Symbol przekreślonego kosza na śmieci na kółkach oznacza, że tego urządzenia nie wolno wyrzucać wraz z odpadami domowymi po zakończeniu jego okresu użytkowania. Urządzenie należy zutylizować w specjalnie do tego wyznaczonych punktach zbiórki, punktach recyklingu lub firmach zajmujących się utylizacją odpadów. Właściciele ZSEE pochodzącego z gospodarstw domowych mogą go bezpłatnie oddać w wyznaczonych punktach zbiórki odpadów komunalnych lub w punktach odbioru utworzonych przez producentów lub dystrybutorów zgodnie z dyrektywą 2012/19/UE. Przed zwróceniem urządzenia należy usunąć wszystkie dane osobowe. Przed zwrotem należy wyjąć baterie lub akumulatorki, które nie są dołączone do starego urządzenia, a także lampki, które można wyjąć bez zniszczenia i przekazać je do osobnej zbiórki. **(CZ)** Likvidace odpadu: Symbol přeškrtnutého kontejneru na kolečkách znamená, že tento spotřebič nesmí být na konci své životnosti likvidován s domovním odpadem. Spotřebič musí být zlikvidován ve speciálně zřízených sběrných místech, recyklačních dvorech nebo společnostech pro likvidaci odpadu. Majitelé OEEZ ze soukromých domácností je mohou odevzdat bezplatně na určených sběrných místech zřízených orgány pro nakládání s komunálním odpadem nebo na místech pro jejich vracení zřízených výrobci nebo distributory podle Směrnice 2012/19/EU. Před vrácením spotřebiče vymažte všechna osobní data. Před vrácením vyjměte baterie nebo dobíjecí baterie, které nejsou přiloženy ke starému zařízení, stejně jako lampy, které lze vyjmout bez zničení, a odevzdejte je do odděleného sběru. **(SK)** Likvidácia odpadu: Symbol prečiarknutého odpadkového koša na kolieskach znamená, že tento spotrebič sa po skončení životnosti nesmie likvidovať s domovým odpadom. Spotrebič sa musí likvidovať na špeciálne zriadených zberných miestach, v recyklačných dvoroch alebo v spoločnostiach na likvidáciu odpadu. Majitelia WEEE zo súkromných domácností ich môžu bezplatne odovzdať na určených zberných miestach orgánov na zneškodňovanie odpadu z verejného odpadu alebo v miestach, ktoré zabezpečujú výrobcovia alebo distribútori podľa smernice 2012/19/EÚ. Pred vrátením spotrebiča vymažte všetky osobné údaje. Pred vrátením vyberte batérie alebo nabíjateľné batérie, ktoré nie sú pribalené k starému zariadeniu, ako aj lampy, ktoré je možné vybrať bez zničenia, a odovzdajte ich na separovaný zber. **(ES)** Deposito de basura: El símbolo del contenedor con ruedas tachado significa que este aparato no debe desecharse con la basura doméstica al final de su vida útil. El aparato debe desecharse en puntos de recogida, vertederos de reciclaje o empresas de eliminación de residuos especialmente habilitados. Los propietarios de RAEE de hogares particulares pueden entregarlos de forma gratuita en los puntos de recogida designados por las autoridades públicas de eliminación de residuos o en puntos de devolución proporcionados por fabricantes o distribuidores en virtud de la Directiva 2012/19/UE. Elimine todos los datos personales antes de devolver el aparato. Antes de devolverlo, retire las baterías o las baterías recargables que no estén incluidas en el dispositivo antiguo, así como las lámparas que se puedan quitar sin destruirlas, y deséchelas en un lugar de recolección separado. **(PT)** Eliminação de resíduos: O símbolo do caixote do lixo com uma cruz significa que este aparelho não deve ser eliminado juntamente com o lixo doméstico no final da sua vida útil. O aparelho deve ser descartado em pontos de coleta especialmente estabelecidos, pontos de reciclagem ou empresas de descarte. Os proprietários de REEE de residências particulares podem entregá-los gratuitamente nos pontos de recolha designados pelas autoridades públicas de eliminação de resíduos ou nos pontos de recolha estabelecidos pelos fabricantes ou distribuidores nos termos da Diretiva 2012/19/UE. Apague todos os dados pessoais antes de devolver o aparelho. Antes de devolver, remova as baterias ou baterias recarregáveis que não estão incluídas no dispositivo antigo, bem como as lâmpadas que podem ser removidas sem destruição e descarte-as em uma coleta seletiva. **(IT)** Smaltimento rifiuti: Il simbolo del bidone su ruote barrato significa che questo apparecchio non deve essere smaltito insieme ai rifiuti domestici al termine della sua vita utile. L'apparecchio deve essere smaltito in punti di raccolta appositamente predisposti, centri di riciclaggio o ditte di smaltimento. I proprietari di RAEE presenti in nuclei domestici privati possono conferirli gratuitamente presso i centri di raccolta designati dalle autorità pubbliche di smaltimento dei rifiuti o ai punti di ritiro istituiti dai produttori o distributori ai sensi della Direttiva 2012/19/UE. Si prega di cancellare tutti i dati personali prima di restituire l'apparecchio. Prima della restituzione, rimuovere le batterie o le batterie ricaricabili non incluse nel Vecchio dispositivo, nonché le lampade che possono essere rimosse senza distruzione, e smaltirle in una raccolta separata. **(HR)** Odlaganje smeća: Simbol prekrižene kante za smeće na kotačićima znači da se ovaj uređaj ne smije odlagati s kućnim otpadom na kraju njegovog životnog vijeka. Uređaj se mora odložiti na posebno postavljenim sabirnim mjestima, reciklažnim dvorištima ili tvrtkama za zbrinjavanje. Vlasnici OEEO-a iz privatnih kućanstava mogu ga besplatno predati na predviđena prikupna mjesta nadležnih tijela za zbrinjavanje otpada ili na mjesta za povrat koja uspostave proizvođači ili distributeri u skladu s Direktivom 2012/19/EU. Prije vraćanja uređaja izbrišite sve osobne podatke. Prije povrata uklonite baterije ili punjive baterije koje nisu priložene starom uređaju, kao i svjetiljke koje se mogu izvaditi bez uništenja, te ih odložite u zasebno prikupljanje **(SI)** Odlaganje odpadkov: Simbol prečrtanega smetnjaka na kolesih pomeni, da tega aparata po koncu njegove življenjske dobe ne smete zavreči med gospodinjske odpadke. Napravo je treba oddati na posebej postavljenih zbirnih mestih, reciklažnih mestih ali v podjetjih za odstranjevanje odpadkov. Lastniki OEEO iz zasebnih gospodinjstev jo lahko brezplačno oddajo na določenih zbirnih mestih javnih organov za odstranjevanje odpadkov ali na prevzemnih mestih, ki jih v skladu z direktivo vzpostavijo proizvajalci ali distributerji. 2012/19/EU. Pred vračilom aparata izbrišite vse osebne podatke. Prosimo, da pred vračilom odstranite baterije ali polnilne baterije, ki niso priložene stari napravi, ter svetilke, ki jih je mogoče odstraniti brez uničenja, in jih odvrzite na ločeno zbirališče. **(HU)** Hulladékkezelés: Az áthúzott, kerekes szemeteskuka szimbóluma azt jelenti, hogy a készüléket hasznos élettartama végén nem szabad a háztartási hulladékkal együtt kidobni. A készüléket speciálisan kialakított gyűjtőhelyeken, újrahasznosító telepeken vagy ártalmatlanító cégekben kell leadni. A magánháztartásokból származó WEEE-ket a tulajdonosok térítésmentesen leadhatják a 2012/19/EU irányelv értelmében a hulladékkezelő hatóságok kijelölt gyűjtőhelyein, illetve a gyártók vagy forgalmazók által létrehozott átvételi helyeken. Kérjük, a készülék visszaküldése előtt töröljön minden személyes adatot. Kérjük, hogy visszaküldés előtt távolítsa el az elemeket vagy újratölthető elemeket, amelyeket nem zárt be a régi készülék, valamint a roncsolás nélkül eltávolítható lámpákat, és helyezze el a szelektív gyűjtőbe. **(RO)** Eliminarea deșeurilor: Simbolul coșului de gunoi tăiat cu roți înseamnă că acest aparat nu trebuie aruncat împreună cu deșeurile menajere la sfârșitul duratei sale de viață. Aparatul trebuie aruncat în puncte de colectare special amenajate, curți de reciclare sau companii de eliminare. Proprietarii de DEEE provenite din gospodării particulare le pot preda gratuit la punctele de colectare desemnate de autoritățile publice de eliminare a deșeurilor sau la punctele de preluare înființate de producători sau distribuitori în conformitate cu Directiva 2012/19/UE. Vă rugăm să ștergeți toate datele personale înainte de a returna aparatul. Înainte de a returna, vă rugăm să scoateți bateriile sau bateriile reîncărcabile care nu sunt incluse în vechiul dispozitiv, precum și lămpile care pot fi îndepărtate fără distrugere și aruncați-le într-o colectare separată. **(GR)** Απόρριψη απορριμμάτων: Το σύμβολο του διαγραμμένου κάδου απορριμμάτων σημαίνει ότι αυτή η συσκευή δεν πρέπει να απορρίπτεται μαζί με τα οικιακά απορρίμματα στο τέλος της ωφέλιμης ζωής της. Η συσκευή πρέπει να απορρίπτεται σε ειδικά διαμορφωμένα σημεία συλλογής, ναυπηγεία ανακύκλωσης ή εταιρείες απόρριψης. Οι κάτοχοι AHHE από ιδιωτικά νοικοκυριά μπορούν να τα παραδίδουν δωρεάν στα καθορισμένα σημεία συλλογής των δημόσιων αρχών διάθεσης αποβλήτων ή στα σημεία ανάκτησης που έχουν δημιουργήσει οι κατασκευαστές ή οι διανομείς σύμφωνα με την οδηγία 2012/19/ΕΕ. Διαγράψτε όλα τα προσωπικά δεδομένα πριν επιστρέψετε τη συσκευή. Πριν επιστρέψετε, αφαιρέστε τις μπαταρίες ή τις επαναφορτιζόμενες μπαταρίες που δεν περικλείονται από την παλιά συσκευή, καθώς και τις λάμπες που μπορούν να αφαιρεθούν χωρίς να καταστραφούν και πετάξτε τις σε ξεχωριστή συλλογή. **(BG)** Изхвърляне на отпадъци: Символът на зачеркнатия кош за боклук на колела означава, че този уред не трябва да се изхвърля заедно с битовите отпадъци в края на полезния му живот. Уредът трябва да се изхвърли в специално създадени пунктове за събиране, площадки за рециклиране или фирми за изхвърляне. Собствениците на ОЕЕО от частни домакинства могат да ги предават безплатно в определените пунктове за събиране на публичните органи за обезвреждане на отпадъци или в пунктовете за обратно приемане, създадени от производителите или дистрибуторите съгласно Директива 2012/19/ЕС. Моля, изтрийте всички лични данни, преди да върнете уреда. Преди да върнете, моля, извадете батериите или презареждаемите батерии, които не са включени в старото устройство, както и лампите, които могат да бъдат премахнати без унищожаване, и ги изхвърлете в отделно събиране.

Made in CHINA

gembird®

USER MANUAL • HANDBUCH • HANDLEIDING • MANUALE D'USO • MANUAL DE USUARIO • MANUAL DO USUÁRIO • MANUEL DESCRIPTIF • INSTRUKCJA OBSŁUGI • UŽIVATELSKÝ MANUÁL • ІНСТРУКЦІЯ КОРИСТУВАЧА • POUŽÍVATEĽSKÁ PRÍRUČKA • VARTOTOJO VADOVAS • MANUAL DE UTILIZARE

Electrical height adjustable TV stand

TVS-100T-01

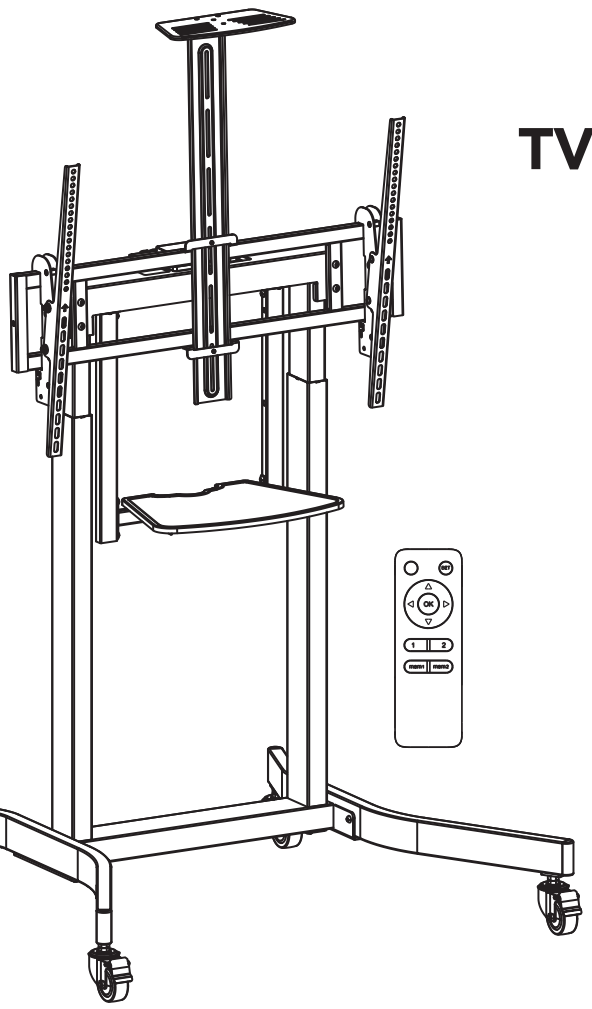

VESA Compatible
200x200 300x200 400x200 300x300 400x300 600x200 350x350 400x400 600x400 800x400 800x600

100" MAX

TV RATED
120kg/264lbs

DVD RATED
5kg/11lbs

CAMERA RATED
5kg/11lbs

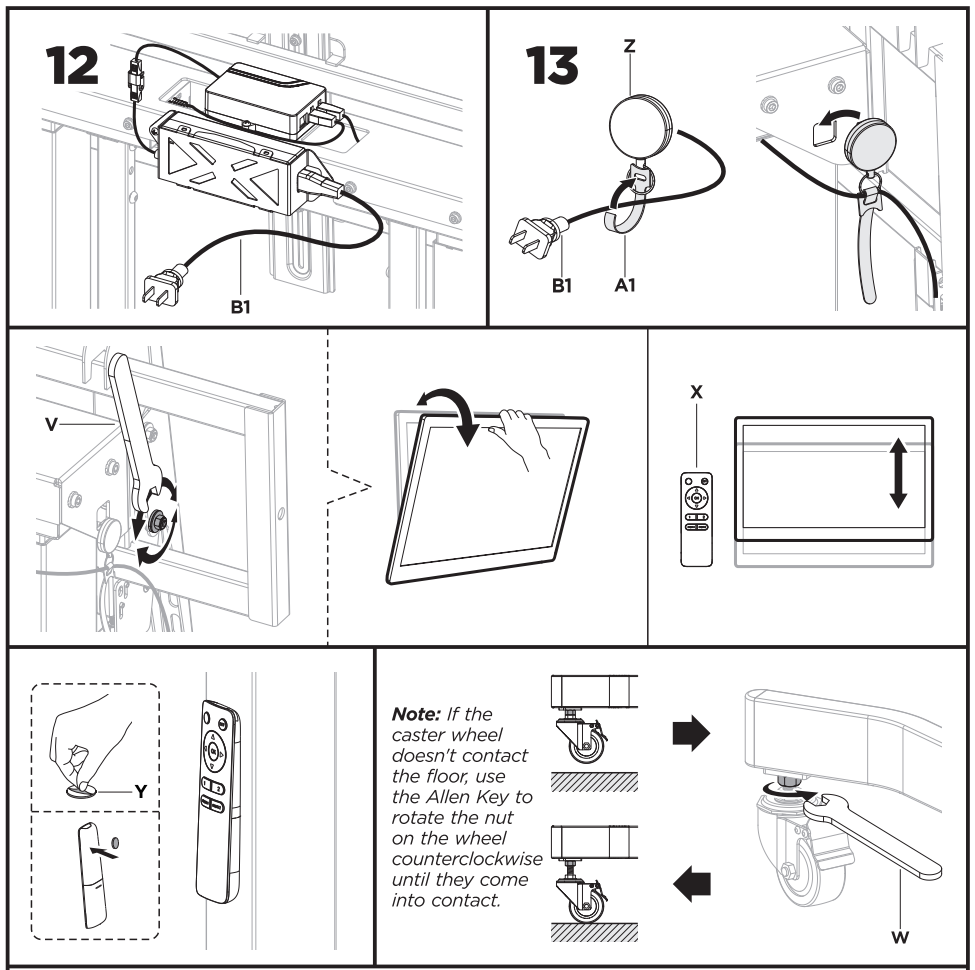

The product is powered by electricity. In order to avoid burns, fire and electric shock and make sure the safe and correct use of the system and maintain the longevity of the overall construction and the built-in electronics, please read the instructions carefully.

⚠ Warnings

- This appliance can be used by children aged from 8 years and above if they have been given supervision or instruction concerning use of the appliance in a safe way and understand the hazards involved. Children shall not play with the appliance. Cleaning and user maintenance shall not be made by children without supervision.
- Persons with reduced physical, sensory or mental capabilities or lack of experience and knowledge must not use the appliance, unless they're under supervision, understand the hazards involved or they have been thoroughly instructed in the use of the apparatus by a person who is responsible for the safety of these persons.
- Don't leave the cords or plug unorganized in order to prevent tripping hazards.
- Any attempts to reconstruct the construction aren't allowed.

⚠ Electrical Safety Instructions

- The appliance is only to be used with the power supply unit provided with the appliance. Alterations of the given power unit aren't allowed.
- Never operate the system with a damaged power supply cord or plug. If any parts is damaged, please contact your service agent of purchase for a replacement.
- Never operate the system if it's in moist environment or its electrical components has contact with liquids.
- Don't clean the product while the power is still connected.
- Don't disassemble or replace components while the power is still connected.
- Unplug the appliance when the system isn't in use, and place the power plug out of children reach.

Note: *Insert 2 AAA batteries (not included) into the controller prior to adjust the TV Stand.*

Adjust the height by pressing the "△" and "▽" button on the remote control. If the TV Stand fails to rise or lower, please match code between TV Stand and the remote control by following the instruction below

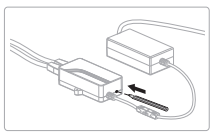

Default Setting & Pairing the Remote to the Mount

STEP 1: Everytime the mount is powered on, the unit beeps consecutively, indicating the mount is ready for default setting.

If it is the first time you turn on the mount, you should pair the remote to the mount first then start default setting. See the STEP 2a below.
If it isn't the first time you turn on the mount, you should start default setting, and see the STEP 2b below.

STEP 2a: Press the small button on the control box with a paper clip or pencil as shown. The unit stops beeping, then press the "SET" button on the remote control, then you hear consecutive beeps for arround 10 seconds indicating the pairing is ongoing. After that, the unit beeps once again, and stop, meaning the pairing is completed. Long press the "OK" button. The mount automatically retract to lowest position. When the unit beeps once again, the default setting is accomplished.

STEP 2b: Long press the "OK" button. The unit stops beeping. Then, the mount automatically retract to the lowest position. When the unit beeps once again, the default setting is accomplished.

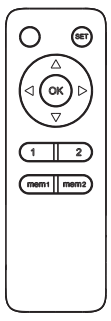

Remote Control User Guide

1. UP/DOWN ARROWS
Press and hold the "△" button to raise the Mount. Press and hold the"▽" button to lower the Mount.
Note: *Remove all surrounding items prior to adjusting the Mount height.*

2. Memory Setting
Long press the "mem1" or "mem2" button for 3 seconds until you hear a beep, indicating that the current position has been saved to memory. The "mem1" "mem2" buttons can each store a height.

3. Activate Height Settings
Press the "1" or "2" button and the mount will automatically get to the position saved in the corresponding button "mem1" or "mem2".

4. Default Setting
Short press the "OK" button and the mount will automatically retract to the lowest position. To stop it, press the "OK" button again.

5. Reset Mode
Long press the "OK" button for 3 seconds until you hear a beep, and the mount starts to move downwards. Then the mount will move upwards a little bit when reaching the lowest position and stop. The system resets successfully when the unit beeps twice.

6. To Unpair a Remote Control
Press the small button on the control box with a paper clip or pencil as how you pairing the remote control. After hearing a beep, hold and press the button for 5 seconds until you hear a beep again, which indicates the unpairing is completed.

Troubleshooting Guide

1. Can't operate

There are 7 possibilities:
- Incorrect operation. Check if the unit beeps once after pressing a button. If so, please follow the instructions found in the manual to properly operate the mount.
- The system of Mount may be error. Check if the unit beeps three times after pressing a button. If so, please reset the system.
- The system may be overheating. Check if the unit beeps four times after pressing a button. If so, allow the unit to cool down (about 30 minutes).
- The AC/DC end of the power cord may be unplugged/disconnect from the outlet/mount. Check the connection to ensure the unit is powered.
- The operating distance may be too far and not in range of the mount. Using the remote control within 30 feet (10m) from the Mounts.
- The batteries in the remote control may be low or dead. Replace the batteries.
- The remote control may be broken. Check to see if the indicator LED found on the remote lights when a button is pressed. If not, contact your place of purchase for a replacement.

2. The TV mount stops moving during operation and emits a long beep.
- Remove all surrounding items.
- The weight of TV may exceed the maximum weight limitation of the mounting system.
- The motor wire may be broken. Reset the system. If the problem still exists, contact your place of purchase for replacement.

3. The TV mount is making an abnormal noise or sound.
- Check all power connections and reset the system. If the unit continues to make an abnormal noise, please contact your place of purchase for a replacement.

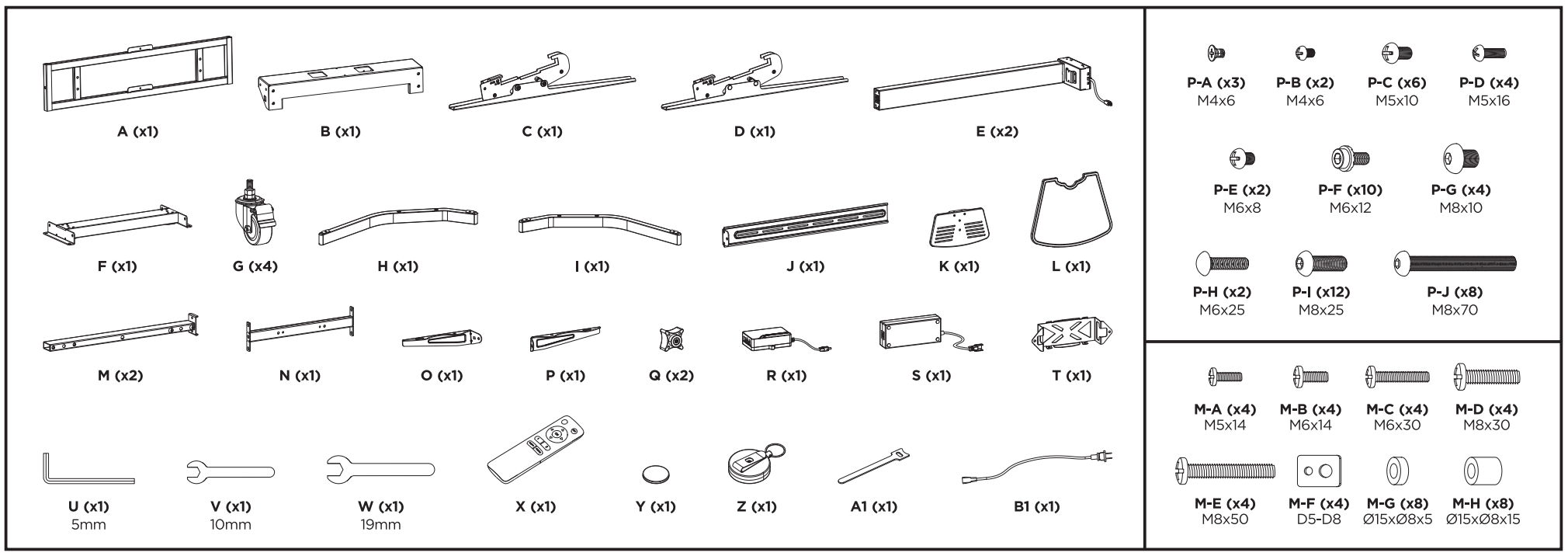

1

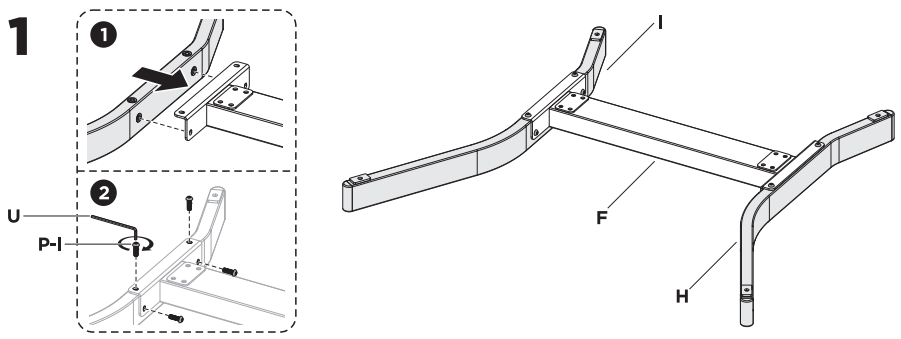

2

Note: *Lock the casters before installation.*

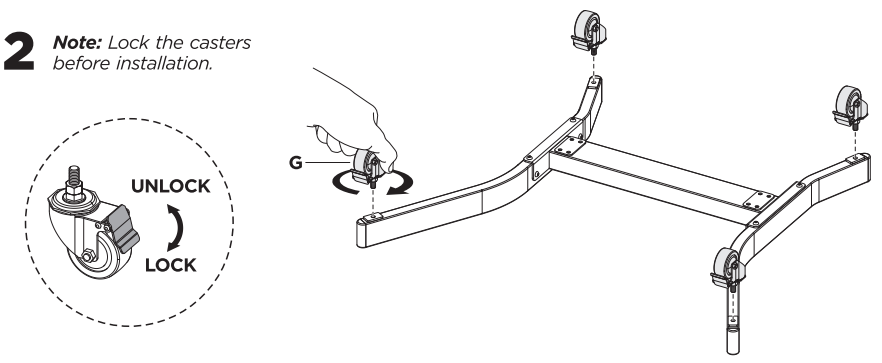

3

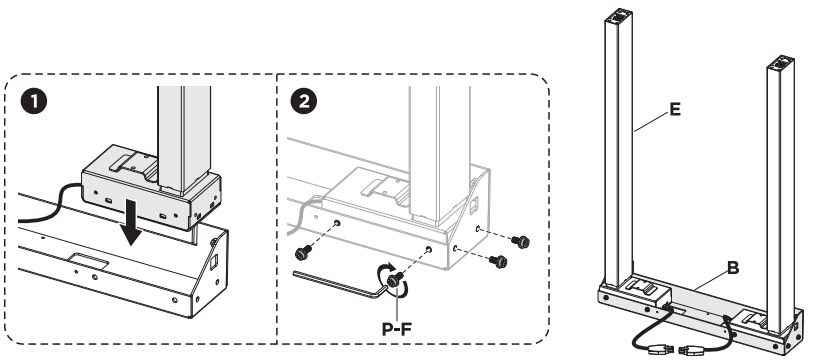

4

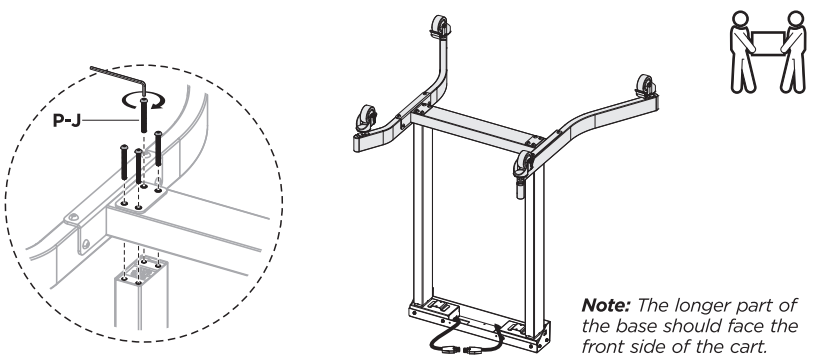

Note: *The longer part of the base should face the front side of the cart.*

5

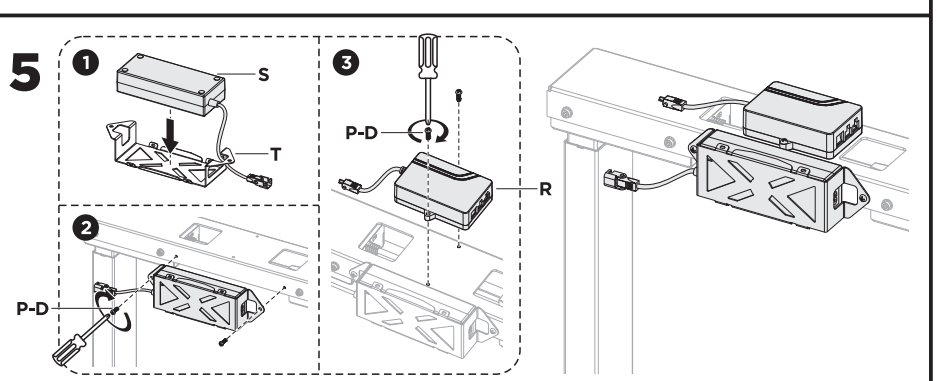

6

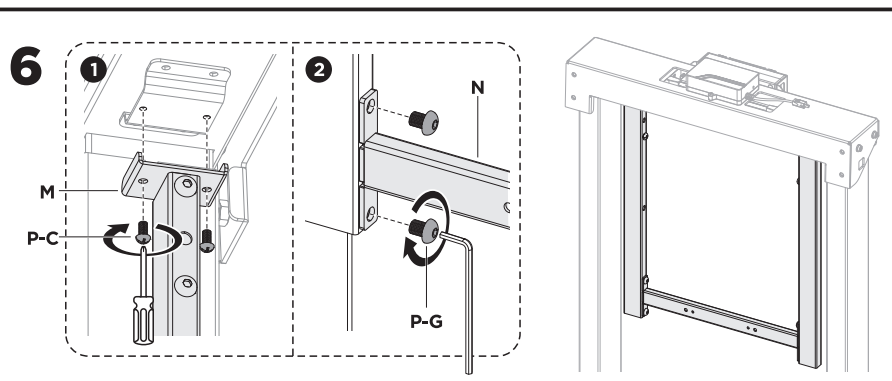

7

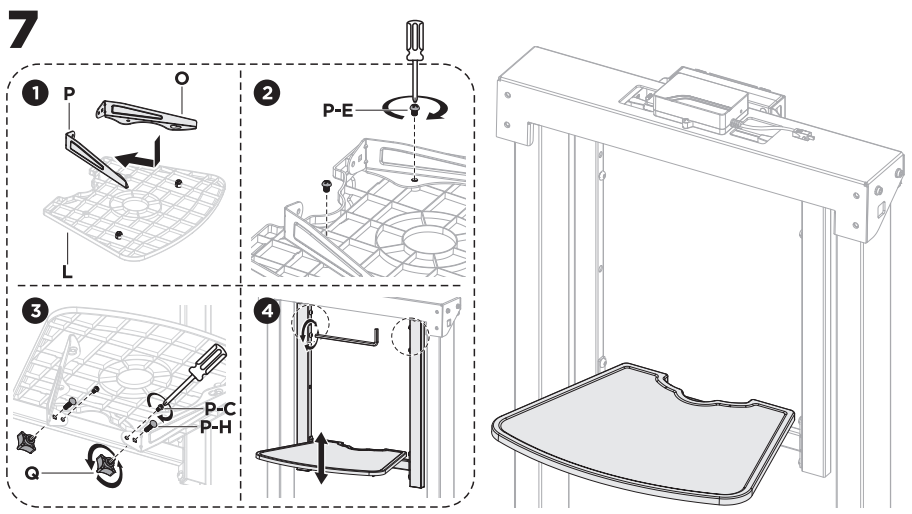

8

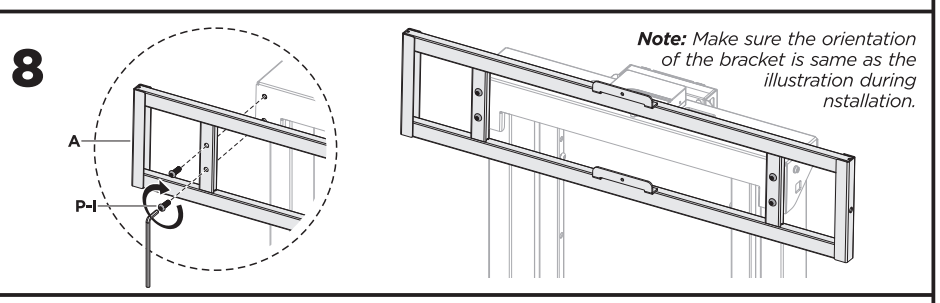

Note: *Make sure the orientation of the bracket is same as the illustration during nstallation.*

9

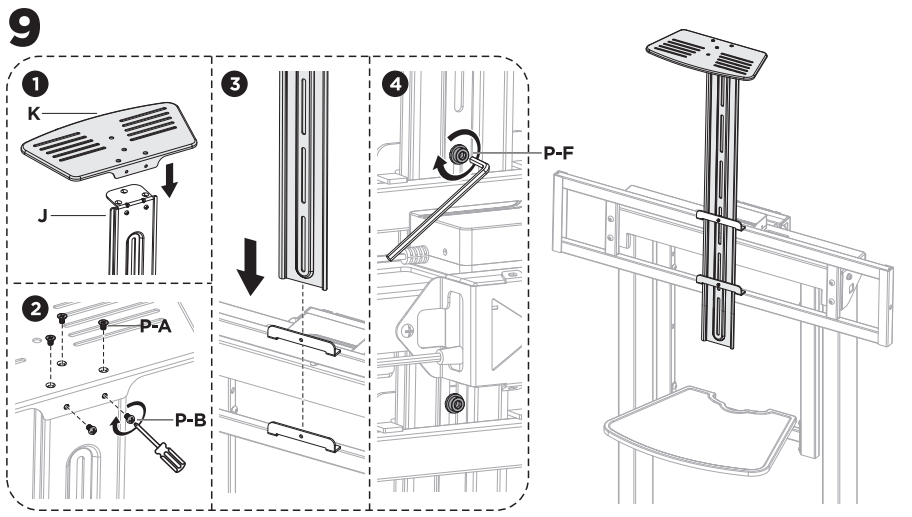

10

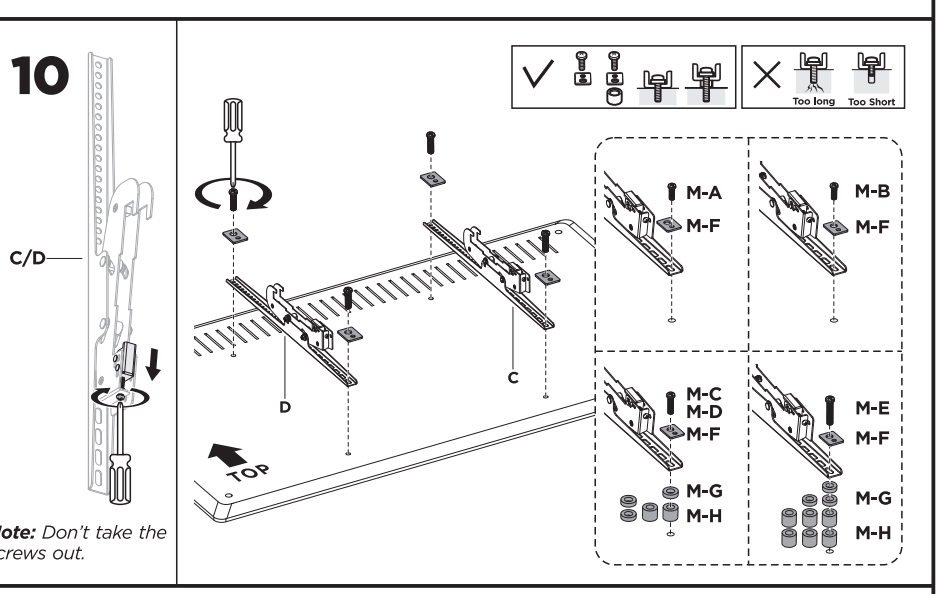

Note: *Don't take the screws out.*
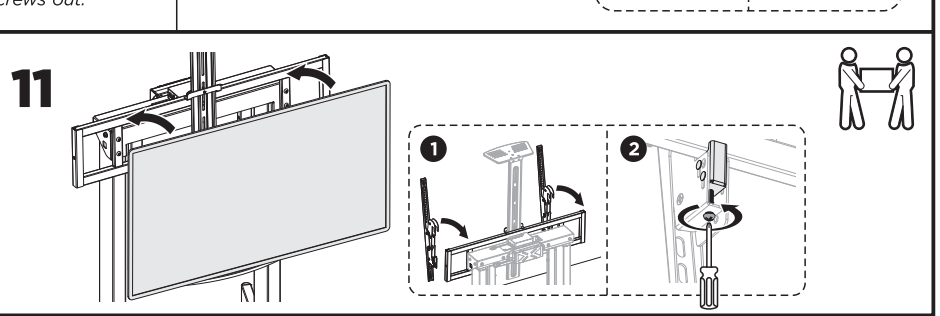
11